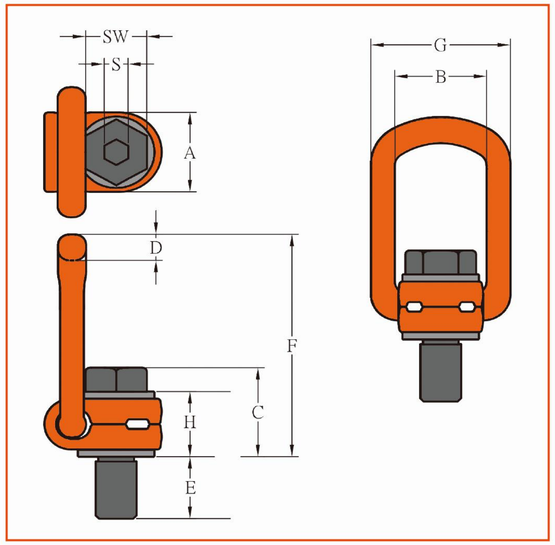

Metric thread

ITEM NO.	WLL/T	M	Dimensions/ mm										Nm	Weight Kg
			E	A	B	C	D	F	G	H	S	SW		
YD081-M8	0.3	M 8×1.25-6g	11	34	37	42	14	98.5	57	36	6	13	30	0.5
YD081-M10	0.63	M10×1.5-6g	16	34	37	44	14	98.5	57	36	6	16	60	0.5
YD081-M12	1	M12×1.75-6g	18	34	37	45	14	98.5	57	36	8	18	100	0.5
YD081-M14	1.2	M14×2.0-6g	21	34	37	46	14	98.5	57	36	10	21	120	0.5
YD081-M16	1.5	M16×2.0-6g	24	34	37	48	14	98.5	57	36	10	24	150	0.5
YD081-M18	2	M18×2.5-6g	26	50	54	57	16.5	143	82	44	12	27	200	1.5
YD081-M20	2.5	M20×2.5-6g	30	50	54	58	16.5	143	82	44	12	30	250	1.5
YD081-M22	3	M22×2.5-6g	30	50	54	60	16.5	143	82	44	12	34	300	1.5
YD081-M24	4	M24×3.0-6g	36	50	54	61	16.5	143	82	44	14	36	400	1.5
YD081-M27	4	M27×3.0-6g	38	60	65	80	22	170	99	62	17	41	400	3
YD081-M30	5	M30×3.5-6g	48	60	65	82	22	170	99	62	17	46	500	3.5
YD081-M33	6	M33×3.5-6g	54	60	65	85	22	174	99	60	22	55	600	3.5
YD081-M36S	7	M36×4.0-6g	54	60	65	85	22	174	99	60	22	55	700	3.5
YD081-M36B	8	M36×4.0-6g	62	77	85	104	27	226.5	123	79	22	55	800	6
YD081-M39	8	M39×4.0-6g	62	77	85	104	27	226.5	123	79	22	55	800	6
YD081-M42S	10	M42×4.5-6g	72	77	85	106	27	226.5	123	79	22	65	1000	6.5
YD081-M42B	15	M42×4.5-6g	63	95	104	117	36	257.5	158	90	22	65	1500	11
YD081-M45	15	M45×4.5-6g	63	95	104	117	36	257.5	158	90	22	65	1600	11
YD081-M48	20	M48×5.0-6g	72	95	104	120	36	257.5	158	90	27	75	2000	12
YD081-M52	20	M52×5.0-6g	72	95	104	120	36	257.5	158	90	27	75	2000	12
YD081-M56	22	M56×5.5-6g	84	95	104	117	36	257.5	158	90	27	85	2100	15
YD081-M64	22.5	M64×6.0-6g	100	114	104	138	36	264.5	158	103	32	95	2200	16.3

★ safety factor: 4:1, B=Big size, S= Small size

Available on demand for choose of standard metric thread, metric fine thread, UNC,UNF thread, BSW(British standard Whitworth thread) and so on.

load style

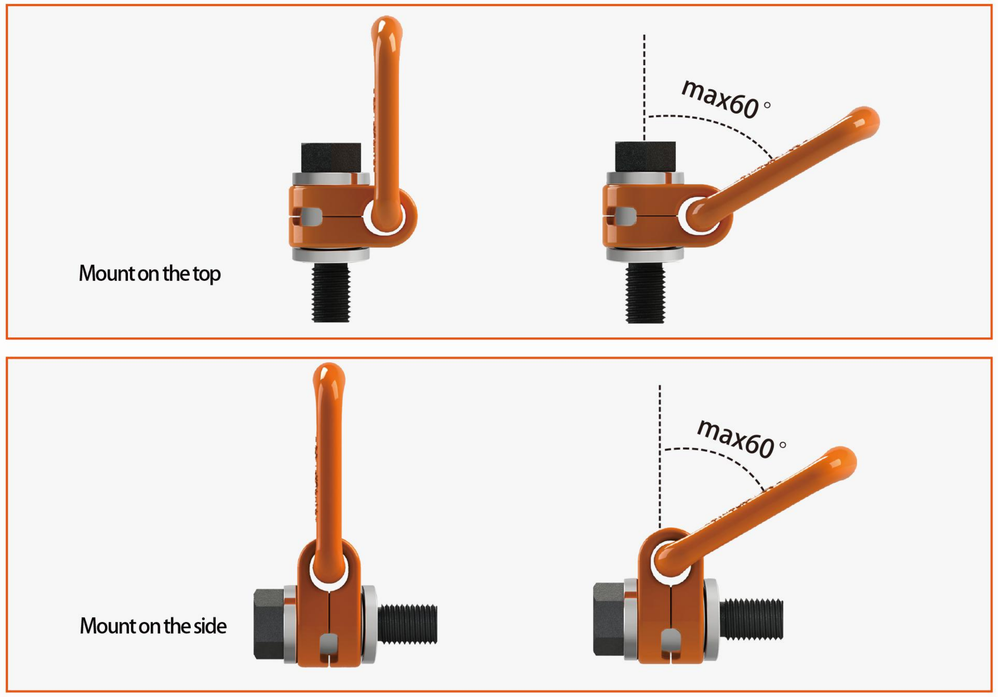

Load style										
Number of pieces		1	2	1	2	2	2	3-4	3-4	
Inclination angle		0°	0°	90°	90°	0-45°	45-60°	Asymmetry	0-45°	45-60°	Asymmetry
ITEM NO.	Thread M	WLL / T								
YD081-M8	8	0.3	0.6	0.3	0.6	0.42	0.3	0.3	0.63	0.45	0.3
YD081-M10	10	0.63	1.26	0.63	1.26	0.88	0.63	0.63	1.32	0.95	0.63
YD081-M12	12	1	2	1	2	1.4	1	1	2.1	1.5	1
YD081-M14	14	1.2	2.4	1.2	2.4	1.7	1.2	1.2	2.5	1.8	1.2
YD081-M16	16	1.5	3	1.5	3	2.1	1.5	1.5	3.1	2.2	1.5
YD081-M18	18	2	4	2	4	2.8	2	2	4.2	3	2
YD081-M20	20	2.5	5	2.5	5	3.5	2.5	2.5	5.2	3.7	2.5
YD081-M22	22	3	6	3	6	4.2	3	3	6.3	4.5	3
YD081-M24	24	4	8	4	8	5.6	4	4	8.4	6	4
YD081-M27	27	4	8	4	8	5.6	4	4	8.4	6	4
YD081-M30	30	5	10	5	10	7	5	5	10.5	7.5	5
YD081-M33	33	6	12	6	12	8.5	6	6	12.7	9	6
YD081-M36S	36	7	14	7	14	9.8	7	7	14.7	10.5	7
YD081-M36B	36	8	16	8	16	11.2	8	8	16.8	12	8
YD081-M39	39	8	16	8	16	11.2	8	8	16.8	12	8
YD081-M42S	42	10	20	10	20	14	10	10	21	15	10
YD081-M42B	42	15	30	15	30	21	15	15	31.5	22.5	15
YD081-M45	45	15	30	15	30	21	15	15	31.5	22.5	15
YD081-M48	48	20	40	20	40	28	20	20	42	30	20
YD081-M52	52	20	40	20	40	28	20	20	42	30	20
YD081-M56	56	22	44	22	44	30.8	22	22	46.2	33	22
YD081-M64	64	22.5	45	22.5	45	31.5	22.5	22.5	47.25	33.75	22.5

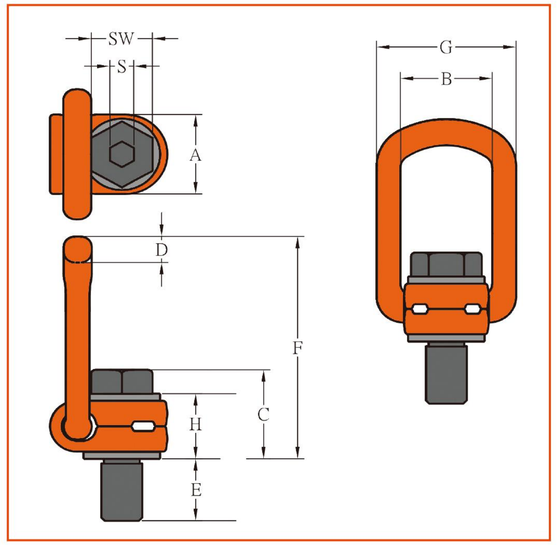

UNC Thread

ITEM NO.	WLL/T	Thread TPI	Dimensions/ mm E	A	B	C	D	F	G	H	S	SW	Nm	Weight Kg
YD081-5/16	0.3	5/16-18UNC-2A	11	34	37	42	14	98.5	57	36	6	13	30	0.5
YD081-3/8	0.63	3/8-16UNC-2A	16	34	37	44	14	98.5	57	36	6	16	60	0.5
YD081-7/16	1	7/16-14UNC-2A	18	34	37	45	14	98.5	57	36	8	18	100	0.5
YD081-1/2	1	1/2-13UNC-2A	21	34	37	46	14	98.5	57	36	10	21	120	0.5
YD081-5/8	1.5	5/8-11UNC-2A	24	34	37	48	14	98.5	57	36	10	24	150	0.5
YD081-3/4	2.5	3/4-10UNC-2A	26	50	54	58	16.5	143	82	44	12	27	200	1.5
YD081-7/8	2.5	7/8-9UNC-2A	30	50	54	58	16.5	143	82	44	12	30	250	1.5
YD081-1	4	1-8UNC-2A	36	50	54	61	16.5	143	82	44	14	36	400	1.5
YD081-1-1/4	5	1-1/4-7UNC-2A	48	60	65	80	22	174	99	60	17	46	500	3.5
YD081-1-1/2	8	1-1/2-6UNC-2A	62	77	85	104	27	226.5	123	79	22	55	800	6
YD081-1-3/4	15	1-3/4-5UNC-2A	63	95	104	116	36	257.5	158	90	22	65	1500	11
YD081-2	20	2-4.5UNC-2A	72	95	104	112	36	257.5	158	82	27	75	2000	12

★ safety factor: 4:1

Available on demand for choose of standard metric thread, metric fine thread, UNC,UNF thread, BSW(British standard Whitworth thread) and so on.

Load style											
Number of pieces		1	2	1	2	2		2	3-4		3-4
Inclination angle		0°	0°	90°	90°	0-45°	45-60°	Asymmetry	0-45°	45-60°	Asymmetry
ITEM NO.	Thread TPI	WLL / T									
YD081-5/16	5/16	0.3	0.6	0.3	0.6	0.42	0.3	0.3	0.63	0.45	0.3
YD081-3/8	3/8	0.63	1.26	0.63	1.26	0.88	0.63	0.63	1.32	0.95	0.63
YD081-7/16	7/16	1	2	1	2	1.4	1	1	2.1	1.5	1
YD081-1/2	1/2	1	2	1	2	1.4	1	1	2.1	1.5	1
YD081-5/8	5/8	1.5	3	1.5	3	2.1	1.5	1.5	3.1	2.2	1.5
YD081-3/4	3/4	2.5	5	2.5	5	3.5	2.5	2.5	5.2	3.7	2.5
YD081-7/8	7/8	2.5	5	2.5	5	3.5	2.5	2.5	5.2	3.7	2.5
YD081-1	1	4	8	4	8	5.6	4	4	8.4	6	4
YD081-1-1/4	1-1/4	5	10	5	10	7	5	5	10.5	7.5	5
YD081-1-1/2	1-1/2	8	16	8	16	11.2	8	8	16.8	12	8
YD081-1-3/4	1-3/4	15	30	15	30	21	15	15	31.5	22.5	15
YD081-2	2	20	40	20	40	28	20	20	42	30	20